Angular head

DINOX NC TOOLING SYSTEM

ANGULAR HEAD	198
SAH	201
MAH	202
KHU	204
HRAG	206
KAG	208
KAH	210
KAC	212
POSITIONING BLOCK	214

ANGULAR HEAD

Angular head

MAH

Rigidity-reinforced side lock type MAH (Reinforced series) / Angle adjustment type angular head

MAH that supports mold machining by improving the performance of the current universal-type product

- Stable machining of large-sized mold
- Supports ball endmill 32mm in diameter (D)
- Improves the rigidity of the KHU type

KHU

Collet type KHU (Free angle) / Angle adjustment type angular head

Wide machining angle range from 0°to 90°

- HSK and SK types are customizable.

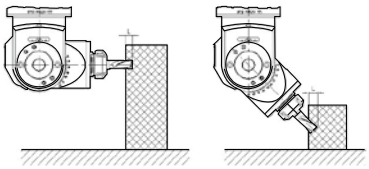

BT50-KHU20-195

KAH

Modular type KAH (90˚type) / Fixed angle-type angular head

Availability in adjusting horizontal machining angle up to 360°.

- To use Tap-exclusive collet, please contact us in advance.
- HSK and SK types are customizable

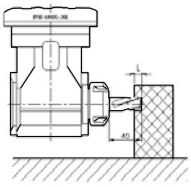

BT50-KAH20-200

ANGULAR HEAD

Angular head

HRAG

Attachment type HRAG(Reinforced type) / Attachment-type angular head

HRAG that improves the rigidity of the attachment-type bracket by 200%

- Provides stable operation of the face mill cutter
- Improves the rigidity of the KAG type

KAG

Attachment type KAG / Attachment-type angular head

Wide horizontal machining angle range from 0° to 360°

- Compatible with various tools for BT40 and BT30.
- HSK and SK types are customizable.

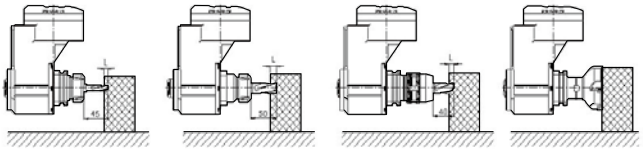

KAC

Modular type KAC (45˚type) / Fixed angle-type angular head

Availability in adjusting horizontal machining angle up to 360°.

- HSK and SK types are customizable.

ANGULAR HEAD

Angular head

Slope machining | Flank mashining | Innerside | Free angle

Features

- Effect of two machines with one
- Various angle machining available
- Light aluminium body

NAMING

BT50	–	KHU	10	–	195
Spindle		Angular Head	Tool Dia.		Length

Names of each part

Positioning pin details

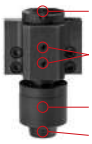

Various machinings

0°-90° slope angle adjustment angular head (MAH, KHU)

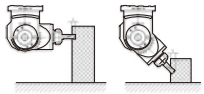

Fixed slope angle 90-degree type angular head (KAH)

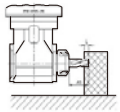

Fixed slope angle 45-degree type angular head (KAC)

Attachment-type angular head (HRAG, KAG)

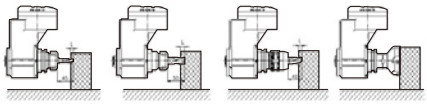

Components

Positioning block

Angular head

Part (Basic)
(Spanner, Wrench)

Warranty

Video CD

BT-SAH

Slim Angular Head

Shank	Max RPM	Milling	Drilling	Flank mashining	Inner side mashining
MAS 403- BT	3,500				

Features

- Angular head for narrow inside boring (min. inner diameter of workpiece: Ø40, min. boring width: 32mm)
- MAX 3,500RPM, Spindle: applied rotation ratio = 1:1.37
- Boring range: Ø3, Ø4, Ø6

NAMING

BT50	–	SAH	6	–	277
Spindle		Slim Angular head	Tool Dia.		Length

Details

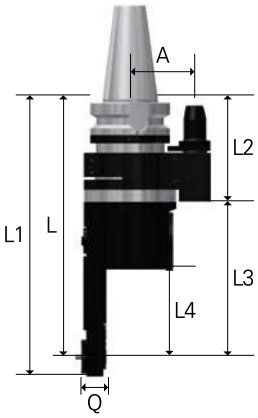

Machining Features

Min. Ø40 Hole
(except tool projection)

Min.32mm gap
(except tool projection)

Item	L	L1	L2	L3	L4	A	Q	G	ØB	Rotation ratio (IN:OUT)	Rotation direction	MAX RPM	Weight (Kg)
BT50-SAH6-277	277	298	183.5	166.5	93.5	80(110)	31.5	40	76	1:1.37	CW:CW	3,500	14

Clamping Force

	Measurement	Measured value (N-m)			
Clamp torque	2	2.5	3	3.5	4
Clamping Force	Not measurable	5.5	6.5	7	7

※ The moderate clamp torque of collet is 3.5N-m.

Exclusive collet

Model No.	Clamping Range
SAH6-C3	3
SAH6-C4	4
SAH6-C6	6

How to clamp

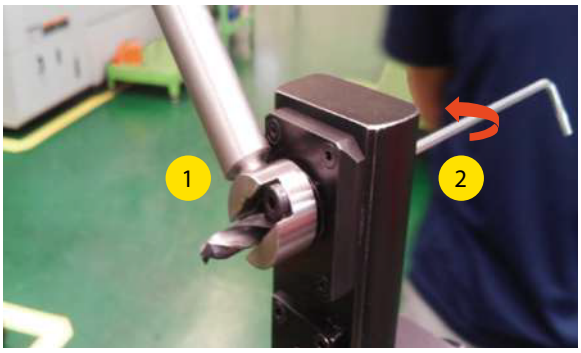

1. Couple the tool with SAH dedicated collet
2. Insert the coupled tool into SAH and fix it with a dedicated tightening jig
3. Turn the bolt using a hexagonal wrench

BT-MAH

MAH for mold(0°- 90°)

MAS 403- BT	C	3,000					
Shank	Coolant System	Max RPM	Milling	Drilling	Corner Rounding	Copy Machining	Inclined Face

Features of rigidity reinforced type

MAH for mold machining

MAH ideal for mold machining by improving the performance of conventional universal type products

- Stability on large mold machining
- Tool diameter (D) 32mm ball end mill usable

Features of MAH (For mold machining) and its comparison with KHU

MAH

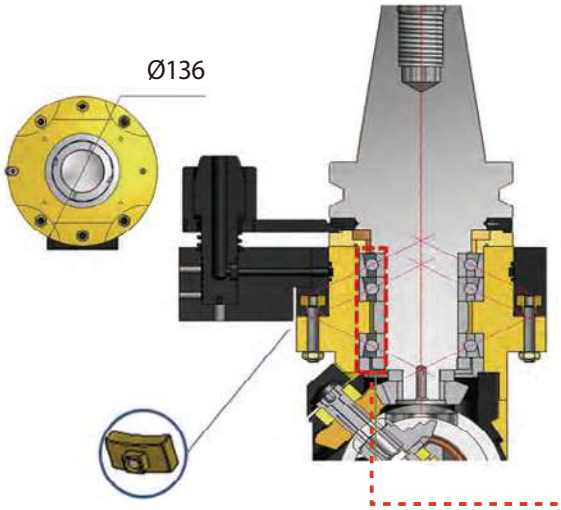

KHU

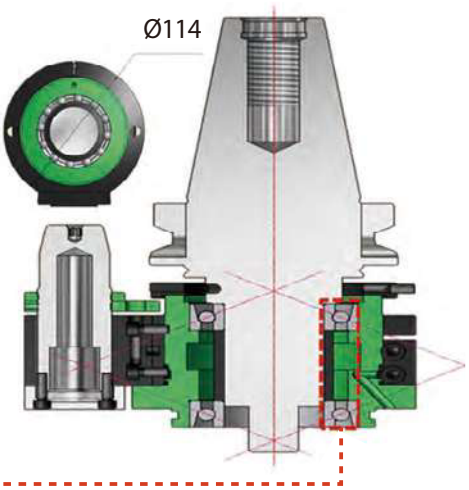

	KHU	MAH	MAH Advantages
Lock type (Joint Type)	Bolt	T-nut	Torsional strain improvement
Bearing	2pcs	3pcs	

C This product does not support the internal coolant system.

BT-MAH

MAH for mold(0°- 90°)

MAS 403- BT	C	3,000					
Shank	Coolant System	Max RPM	Milling	Drilling	Corner Rounding	Copy Machining	Inclined Face

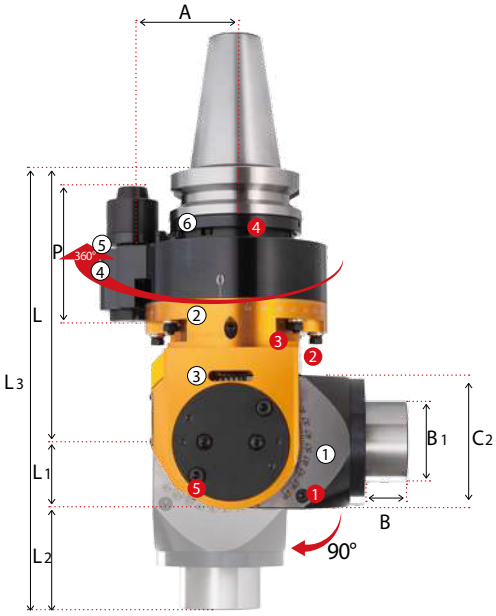

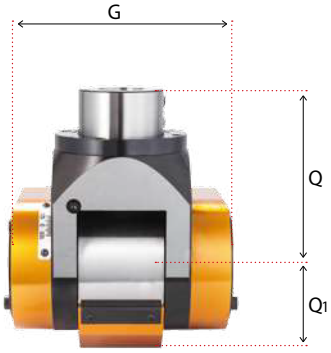

POSITIONING PIN

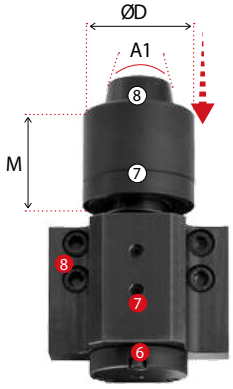

Shank size	M	A1	ØD
BT50	56.5	20°	Ø40

NO	Name
①	Slope angle split gradation (Angles vertically splittable between 0 and 90°)
②	Rotation angle split gradation (360° adjustment)
③	Head
④	Positioning pin part
⑤	Jaw key
⑥	Positioning ring
⑦	Positioning cover
⑧	Positioning pin

NO	Parts name	Model No.
1	Slope angle split gradation screw	BT1216
2	Head fixing bolt	BT0645
3	Rotation angle split gradation screw	BT0640
4	Positioning ring set screw	MSST5-12
5	Tilt Axies fixing bolt	BH0616
6	Positioning pin height adjustment screw	BT0516
7	Positioning pin set screw	BT0512
8	Body position block set blo	BX0516

Model No.	ØD	L	L1	L2	L3	C	C1	G	C2	Q	Q1	B	B1	P	A	MAX RPM	Tool mounting	Kg	Package weight (Kg)
BT50-MAH32-200	32	200	47	78	325	136	95	54	95	125	63	31	60	95	80	3,000	SIDE LOCK	19.6	32.0

• For more information on positioning block, see 214p.

BT-KHU

KHU_ Collet type angular head (0°-90°)

MAS 403- BT	C	6,000	Milling	Drilling	Corner Rounding	Copy Machining	Inclined Face
Shank	Coolant System	Max RPM					

KHU

Adjustable angle-type angular head that enables flexible machining

- Wide vertical (0˚~90˚) and horizontal (0˚~360˚) machining angle range
- To use Tap-exclusive collet, please contact us in advance.
- HSK and SK types are customizable.

Precautions

Do not inject cutting oil direct to the angular head body.

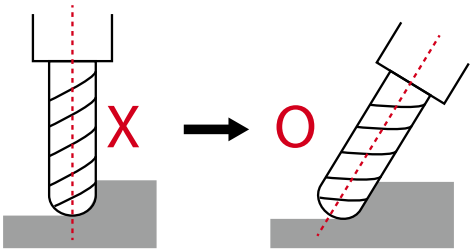

Be sure to give a slope to the cutting edge of a ball end mill when machining it as the ball end mill edge is worn out and the surface roughness of the workpiece becomes defective.

Machining Example

Model : BT50-KHU20-195

Cutting tool	Workpiece	Cutting depth	RPM	Feed (mm/rev)	Feed (mm/rev)	Cutting angle
Ø16-2 Flute Endmill(HSS), Over length-40mm	S45C	2	600	48	0.04	90˚
	AL	3	1200	168	0.07	
	S45C	3	600	48	0.04	45˚
	AL	5	1200	144	0.06	

Spare Part

Angular head	Main components		For separate purchase
	Nut	Spanner	GERC Collet
KHU10	R16-AH	S-25	GERC16-øD
KHU20	RU32-AH	48-52	GERC32-øD

C This product does not support the internal coolant system.

BT-KHU

KHU_ Collet type angular head (0°-90°)

MAS 403- BT	C	6,000					
Shank	Coolant System	Max RPM	Milling	Drilling	Corner Rounding	Copy Machining	Inclined Face

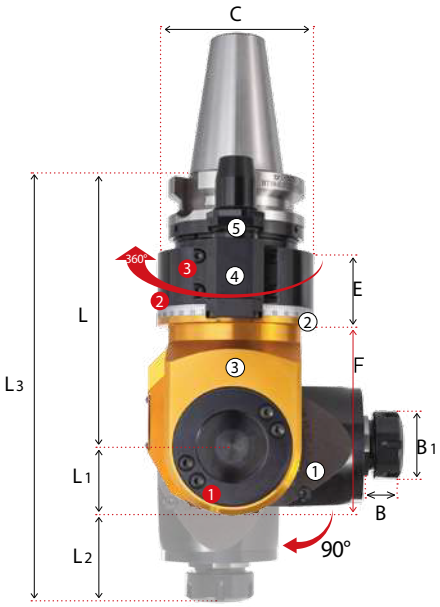

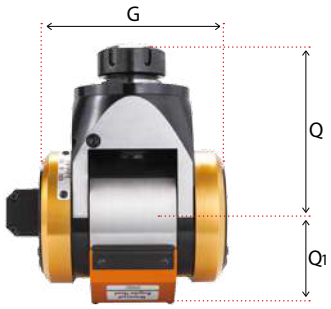

POSITIONING PIN

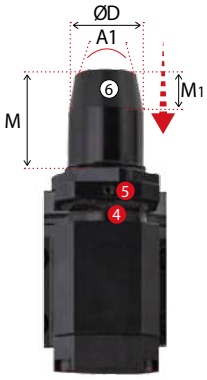

Shank Model No.	M	M1	A1	ØD
BT40	Max : 32 Min : 26	10	20°	Ø19.6
BT50	Max : 35 Min : 29	15	20°	Ø28

NO	Name
①	Slope angle split gradation (Angles vertically splittable between 0 and 90°)
②	Rotation angle split-gradation (360° freely selectable)
③	Head
④	Positioning pin parts
⑤	Jaw key
⑥	Height adjusting wrench hole

NO	Parts name	Model No.
1	Tilt Axies fixing bolt	BH0630
2	Bracket angle fixing bolt	BX0630
3	Position block fixing bolt	BX0512
4	Set screw	BT0404
5	Fixing bolt	BX05630

Model No.	ØD (Clamping Range)	B	B1	C	E	F	C2	L1	L2	L3	L	ØD	A	G	Q	Q1	Gear ratio	Rotation direction versus spindle	MAX RPM	Applicable collet	Kg	Package weight (Kg)
BT40-KHU10-160	1.0~10.0	22	28	96	51	98	96	160	33	54	247	58	65	90	87	40	1:2	Normal rotation	6,000	GERC16	8.3	15.2
BT50-KHU10-180	1.0~10.0	22	28	114	53	103	114	180	33	54	267	84	80	90	87	40	1:2	Normal rotation	6,000	GERC16	11.5	23.9
BT50-KHU20-195	1.0~20.0	29	50	114	53	132	114	195	47	73	315	84	80	124	120	63	1:1	Normal rotation	3,000	GERC32	17.9	30.3

• For more information on the applicable collet, see 75p.

• For more information on positioning block, see 214p.

BT-HRAG

HRAG(90° fixed)

MAS 403- BT	C	3,000	Milling	Drilling	Reaming	Facing	Tapping	Side Cutter
Shank	Coolant System	Max RPM						

HRAG

HRAG that improves the rigidity of the attachment-type bracket by 200%

- Provides stable operation of the face mill cutter
- Enhances compatibility with the machining device due to easy bracket disassembly/assembly even on the BT50 shank
- Improves product life cycle

HRAG (rigidity-reinforced type) features and comparison with KAG

HRAG

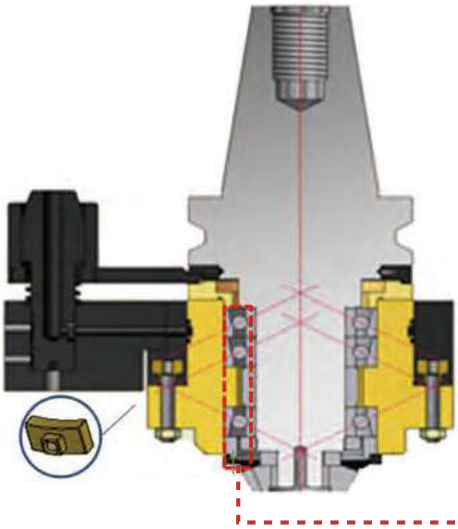

KAG

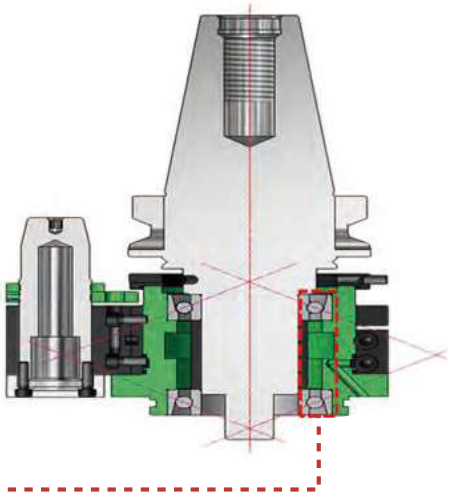

	KHU	HRAG	HRAG Advantages
Lock type (Joint Type)	Bolt	T-nut	Torsional strain improvement
Bearing	2pcs	3pcs	

C This product does not support the internal coolant system.

BT-HRAG

HRAG(90° fixed)

MAS 403- BT	C	3,000	Milling	Drilling	Reaming	Facing	Tapping	Side Cutter
Shank	Coolant System	Max RPM						

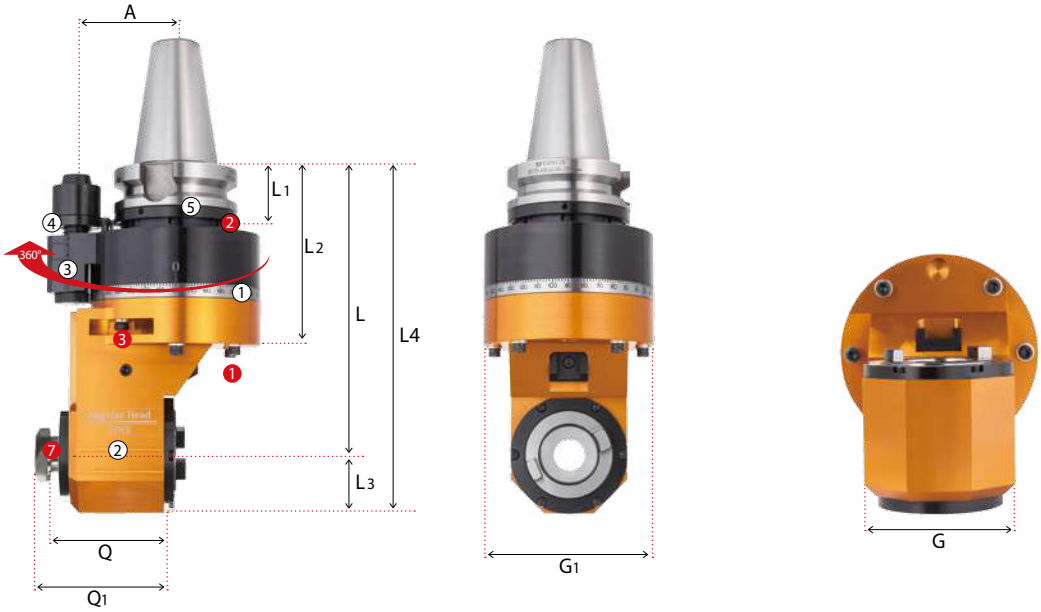

POSITIONING PIN

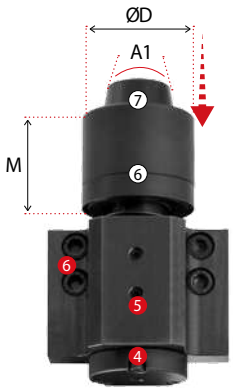

Shank size	M	A1	ØD
BT50	56.5	20°	Ø40

NO	Name
①	Rotation angle split gradation (360° adjustment)
②	Head
③	Positioning pin part
④	Jaw key
⑤	Positioning ring
⑥	Positioning cover
⑦	Positioning pin

NO	Parts name	Model No.
1	Head fixing bolt	BX0660
2	Positioning set screw	MSST5-12
3	Rotation angle split gradation screw	BT0648
4	Positioning pin height adjustment screw	BT0516
5	Positioning pin set screw	BT0512
6	Body position block set screw	BX0516
7	BT / NT bolt	

Model No.	L	L1	L2	Q	Q1	A	G1	G	MAX RPM	Mounting tool shank	Kg
BT50-HRAG40-230	230	56.5	145	89	101	80	136	93	3,000	BT/NT40	18.2

• For more information on positioning block, see 214p.

BT-KAG

KAG(90° Fixed type)

MAS 403- BT	C	4,000	Milling	Drilling	Reaming	Facing	Side Cutter
Shank	Coolant System	Max RPM					

KAG

- Wide horizontal machining angle range from 0° to 360°
- Compatible with various tools such as BT40 and BT30.
- HSK and SK types are customizable.
- Coolant types are to be ordered separately.

How to tighten the tool

1. Insert the tool ① into the angular head spindle.
2. Tightly secure the tool ① using the fixing bolt ②. (BT type)
3. Tighten the tool ① by putting the ring on the bolt. (NT type)

Machining Example

Model : BT50-KAG40-230

Cutting tool	Workpiece	Cutting depth	RPM	Feed (mm/rev)	Feed (mm/rev)
BT40-SDC20-60 Ø12-2 Flute Endmill (HSS)	S45C	3	400	72	0.09
		3	200	36	0.09
NT40-SDC20-60 Ø20-2 Flute Endmill (HSS)	S45C	4	500	50	0.05
	AL	10	1,000	100	0.05
BT40-NPM20-85 Ø20-2 Flute Endmill (HSS) over hang 40mm	S45C	3	400	72	0.09
		3	400	36	0.09
	AL	5	400	72	0.09
		5	480	86	0.09
		10	400	72	0.09
		10	320	58	0.09
BT40-FMA25.4-45 Ø80 Shoulder mill (5 Flute-50L)	S45C	2	400	120	
		1	200	60	
	AL	2	600	150	
		1	600	150	

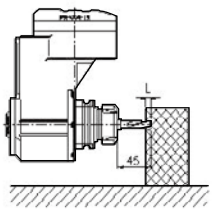

BT40-SDC20-60
(Ø12 E/M)

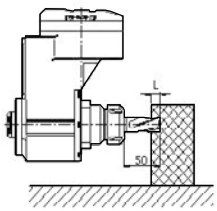

NT40-SDC20-60
(Ø20 E/M)

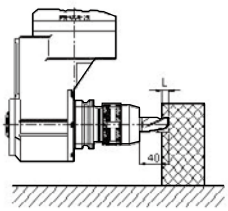

BT40-NPM20-85
(Ø20 E/M)

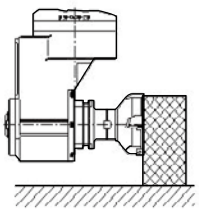

BT40-FMA25.4-45
(Ø80 Shoulder Mill)

C This product does not support the internal coolant system.

BT-KAG

KAG(90° Fixed type)

MAS 403- BT	C	4,000	Milling	Drilling	Reaming	Facing	Side Cutter
Shank	Coolant System	Max RPM					

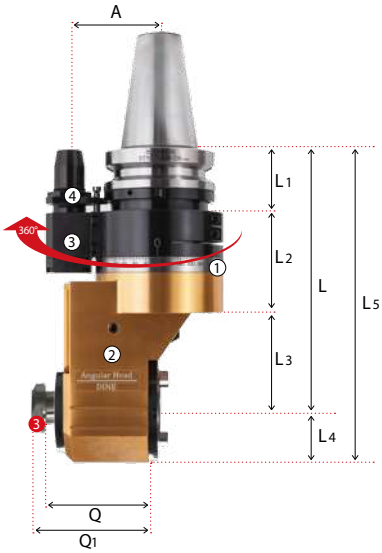

POSITIONING PIN

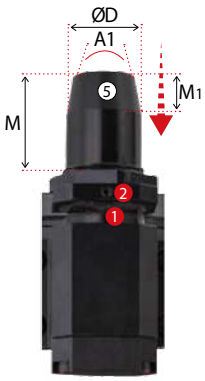

Shank Model No.	M	M1	A1	ØD
BT40	Max : 32 Min : 26	10	20°	Ø19.6
BT50	Max : 35 Min : 29	15	20°	Ø28

NO	Name
①	Rotation angle split-gradation (360° freely selectable)
②	Head
③	Positioning pin part
④	Jaw key
⑤	Height adjusting wrench hole

NO	Parts name	Model No.
1	Set screw	BT0404
2	Fixing bolt	BX50630
3	BT / NT bolt	

Model No.	L	L1	L2	L3	L4	Q	Q1	A	C	G	Gear ratio	Rotation direction versus spindle	MAX RPM	Holder shank mounted	Kg	Package weight (Kg)
BT40-KAG30-195	195	44	86	65	37.5	66	70	65	96	75	1:1	Normal rotation	4,000	BT/NT30	7.2	14.0
BT50-KAG40-230	230	57	88	85	46.5	89	94	80	114	93	1:1	Normal rotation	3,000	BT/NT40	15.7	28.1

• For more information on positioning block, see 214p.

BT-KAH

KAH_Collet type angular head (90° fixed type)

MAS 403- BT	C	5,000				
Shank	Coolant System	Max RPM	Milling	Drilling	Free angle	Inner side mashining

KAH

Adjustable angle-type angular head that enables flexible machining

- Adjusting angle up to 360˚.
- To use Tap-exclusive Collet, please contact us in advance.
- HSK and SK types are customizable.

Coolant

- ATC (automatic tool change) available
- The tool turns in the opposite direction of the spindle.
- Do not inject cutting oil direct to the angular head body.

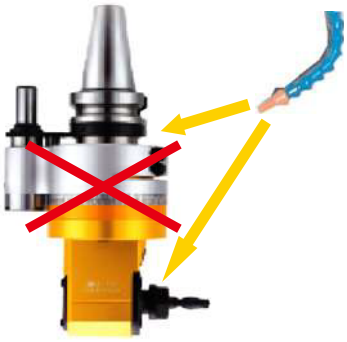

Machining Example

Model : BT50-KAH20-200

Cutting tool	Workpiece	Machining depth	RPM	Feed (mm/min)	Feed (mm/rev)
Ø16-2 Flut Endmill(HSS), Over length -40mm	(rpm)	3	700	98	0.07
		4	500	60	0.06
	Al	7	900	72	0.04
		4	1800	144	0.04

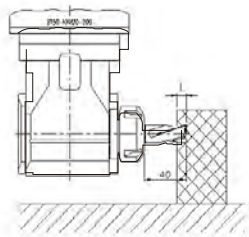

BT50-KAH20-200

Spare Part

Angular head	Main Components		Components Not Included
	Nut	Spanner	GERC Collet
KAH7	R11-AH	S-17	GERC11-øD
KHU10	R16-AH(M20)	S-25	GERC16-øD
KAH13	RU20-AH	35-38	GERC20-øD
KHU20	RU32-AH	48-52	GERC32-øD

C This product does not support the internal coolant system.

BT-KAH

KAH_Collet type angular head (90° fixed type)

MAS 403- BT	C	5,000				
Shank	Coolant System	Max RPM	Milling	Drilling	Free angle	Inner side mashining

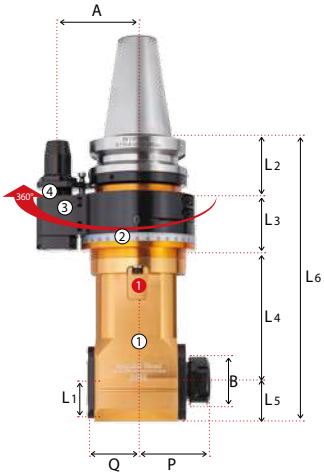

POSITIONING PIN

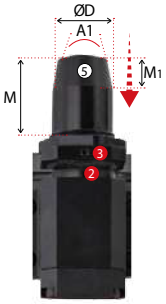

Shank Model No.	M	M1	A1	ØD
BT40	Max : 32 Min : 26	10	20°	Ø19.6
BT50	Max : 35 Min : 29	15	20°	Ø28

NO	Name
①	Head
②	Rotation angle split-gradation (360° freely selectable)
③	Positioning pin parts
④	Jaw key
⑤	Height adjusting wrench hole

NO	Parts name	Model No.
1	Bolt for fixing the head	BX0618
2	Set screw	BT0404
3	Fixing bolt	BX50630

Model No.	ØD	L	L1	L2	L3	L4	L5	L6	B	A	P	Q	G	G1	Gear ratio	MAX RPM	Applicable collet	Kg
BT40-KAH7-170	1.0~7.0	170	20	44	71	55	20	190	19	65	37	24.5	40	96	1:1	5,000	GERC11	4.6
BT40-KAH10-195	1.0~10.0	195	25	44	71	80	25	220	28	65	46	32	58	96	1:1	5,000	GERC16	5.8
BT40-KAH13-165	1.0~13.0	165	28	44	71	50	28	193	35	65	53	35	60	96	1:1	5,000	GERC20	5.7
BT40-KAH20-180	2.0~20.0	180	38	44	71	65	38	218	50	65	71	49	76	96	1:1	3,500	GERC32	6.7
BT50-KAH07-220	1.0~7.0	220	20	57	54	109	20	240	19	80	37	24.5	40	96	1:1	3,500	GERC11	9.8
BT50-KAH10-215	1.0~10.0	215	25	57	54	104	25	240	28	80	46	32	58	96	1:1	3,500	GERC16	10.7
BT50-KAH10-260	1.0~10.0	260	25	57	54	149	25	285	28	80	46	32	58	96	1:1	3,500	GERC16	11
BT50-KAH13-260	1.0~13.0	260	28	57	54	149	28	288	35	80	53	35	60	96	1:1	3,500	GERC20	11.2
BT50-KAH20-200	2.0~20.0	200	38	57	54	89	38	238	50	80	71	49	76	96	1:1	3,500	GERC32	11.6
BT50-KAH20-240	2.0~20.0	240	38	57	54	129	38	278	20	80	71	49	76	96	1:1	3,500	GERC32	12.4

• For more information on positioning block, see 214p.

BT-KAC

Modular type KAC(45° Fixed type)

MAS 403- BT	C	5,000		
Shank	Coolant System	Max RPM	Slope machining	Milling

KAC

Fixed angle type angular head that enables flexible machining

- Adjusting angle up to 360˚.
- To use Tap-exclusive Collet, please contact us in advance.
- 45-degree fixed type angular head
- For BT40 types, please contact us separately.

Precautions

Do not inject cutting oil direct to the angular head body.

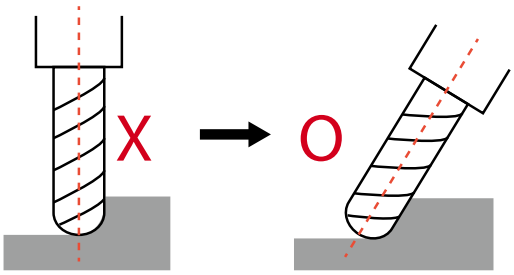

Be sure to give a slope to the cutting edge of a ball end mill when machining it as the ball end mill edge is worn out and the surface roughness of the workpiece becomes defective.

Spare Part

Chuck	Main Components		Components Not Included
	Nut	Spanner	GERC Collet
KAC10	R16-AH (M20)	S-25	GERC16-øD
KAC10	RU20-AH	35-38	GERC20-øD
KHU20	RU32-AH	48-52	GERC32-øD

※To order nuts, please contact us in advance.

C This product does not support the internal coolant system.

BT-KAC

Modular type KAC(45° Fixed type)

MAS 403- BT	C	5,000		
Shank	Coolant System	Max RPM	Slope machining	Milling

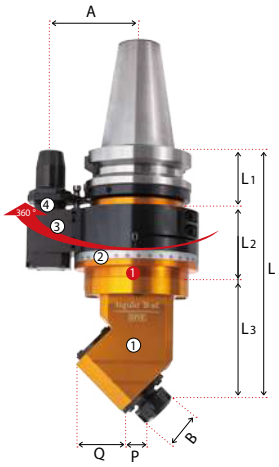

POSITIONING PIN

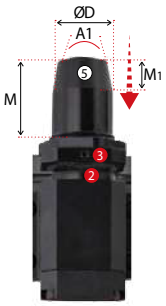

Shank Model No.	M	M1	A1	ØD
BT40	Max : 32 Min : 26	10	20°	Ø19.6
BT50	Max : 35 Min : 29	15	20°	Ø28

NO	Name
①	Head
②	Rotation angle split-gradation (360° freely selectable)
③	Positioning pin parts
④	Jaw key
⑤	Height adjusting wrench hole

NO	Parts name	Model No.
1	Bolt for fixing the head	BX0618
2	Set screw	BT0404
3	Fixing bolt	BX50630

Model No.	ØD	L	L1	L2	L3	B	G	G1	P	Q	A	MAX RPM	Applicable collet	Kg
BT50-KAC10-240	1.0~10.0	240	57	54	129	28	60	96	25	54	80	5,000	GERC16	9.7
BT50-KAC13-240	1.0~13.0	240	57	54	129	28	60	96	25	54	80	5,000	GERC20	10.7
BT50-KAC20-250	2.0~20.0	240	57	54	139	50	72	96	30	60	80	3,500	GERC32	11.7

• For more information on the applicable collet, see 75p.
• For more information on positioning block, see 214p.

POSITIONING BLOCK

Positioning block (For BT40)

How to install the positioning block on the machine

For BT40 — 1. Customer standard type-A group(60˚) Standard type-A(60˚)

- In case Min. PCD=110mm
- Spindle diameter less than Ø94 available
- Keep the minimum distance 55mm between bolts

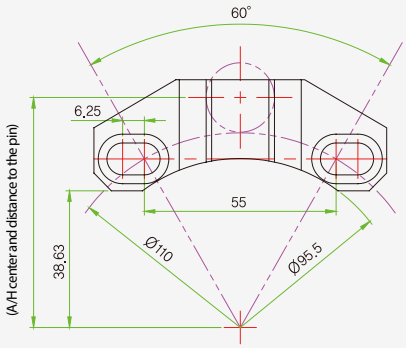

- In case Max. PCD=135mm
- Spindle diameter less than Ø112 available
- Keep the minimum distance 67.5mm between bolts

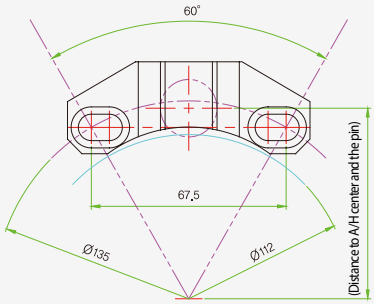

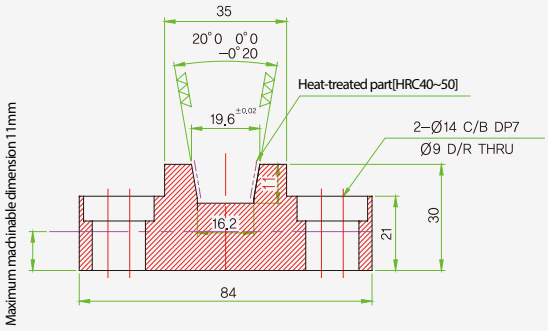

Semi-finishing : Requires block height machining

- The customer must machine the bottom of the block in person to use for use after determining the block height to avoid interference.

※ Minimum block height: 19mm (based on the upper side)

- Only the taper part to be heat-treated
- Based on M8; in the case of less than M6, washer supplied

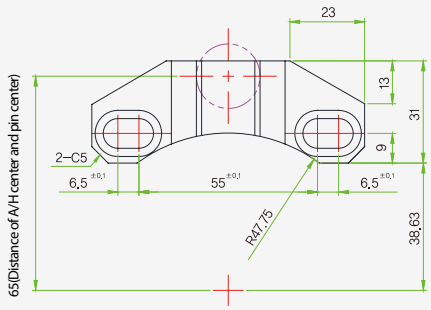

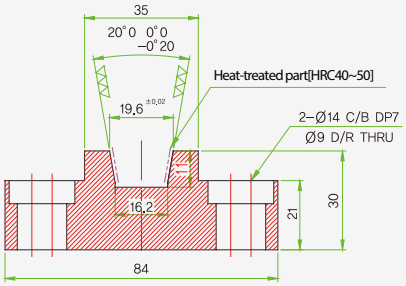

- DINE Inc. provides two positioning block types by default.
  (Customer standard type (A type) / Customized type)
- For more information on how to determine the block height, see 215p.

POSITIONING BLOCK

Positioning block (For BT40)

For BT40 — 2. Customized type

The customer directly checks the equipment spindle and determines the block height, width and hole location to avoid interference. After that, the customer directly performs machining operation for use.

Semi-Finishing (Only the taper part is heat-treated)

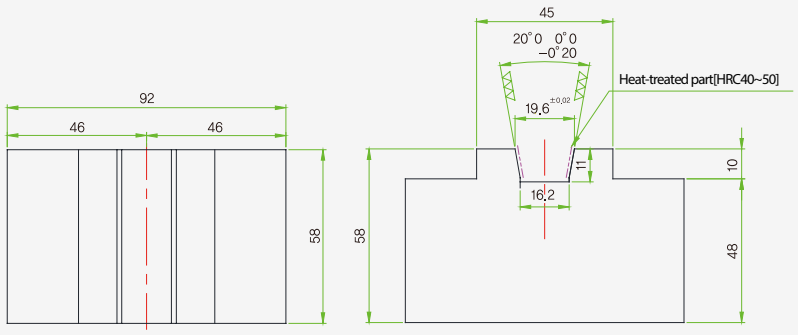

For BT40 — How to determine the block height

B lock height H A + B

※ Spindle housing shapes and images may vary according to equipment.

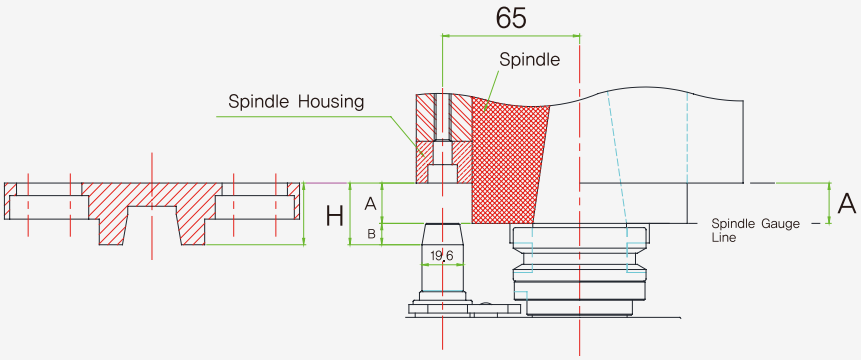

- A : The distance between spindle gauge line to spindle housing cross section for the block bottom
  (To be measured by the customer according to machine specs.)
- B : 10mm [BT40]

B : 10mm [BT40]

e.g.) If A is 20.5mm, the block height H = 20.5 + 10 = 30.5mm.

⚠ Note: Be sure to check whether the ATC is interfered before conducting a trial run after installing the positioning block

POSITIONING BLOCK

Positioning block (For BT50)

How to install the positioning block on the machine

For BT50 — 1. Customer standard type-A group(60˚) Standard type-A(60˚)

- In case Min. PCD = 155
- Spindle diameter less than Ø130 available
- Keep the minimum distance 77.5mm between bolts

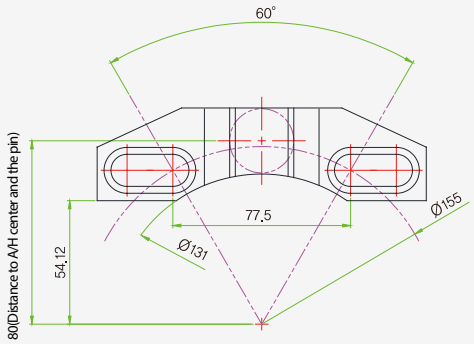

- In case Max. PCD = 235
- Spindle diameter less than Ø148 available
- Keep the minimum distance 117.5mm between bolts

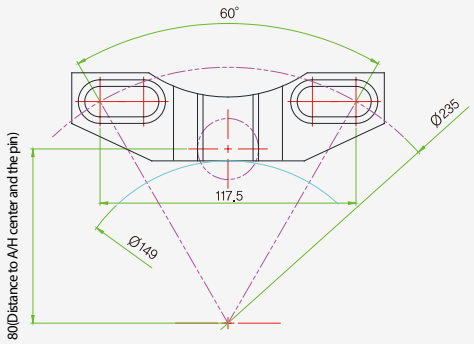

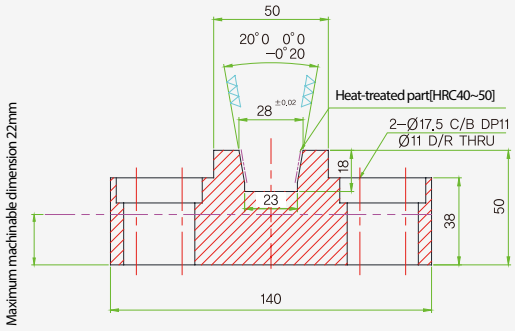

Semi-finishing : Requires block height machining

- The customer should machine the bottom of the block him/herself for use after determining the block height to avoid interference.

※ Minimum block height: 28mm (based on the upper side)

- Only the taper part to be heat-treated
- Based on M10; in the case of less than M8, washer supplied

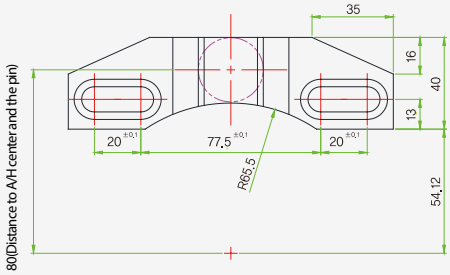

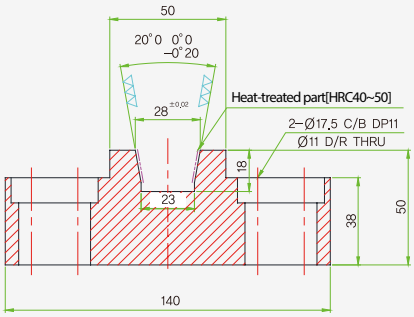

- DINE Inc. provides two positioning block types by default.
  (Customer standard type (A type) / Customized type)
- For more information on how to determine the block height, see 217p.

POSITIONING BLOCK

Positioning block (For BT50)

For BT50 — 2. Customized type

The customer directly checks the equipment spindle and determines the block height, width and hole location to avoid interference. After that, the customer directly performs machining operation for use.

Semi-Finishing (Only the taper part is heat-treated)

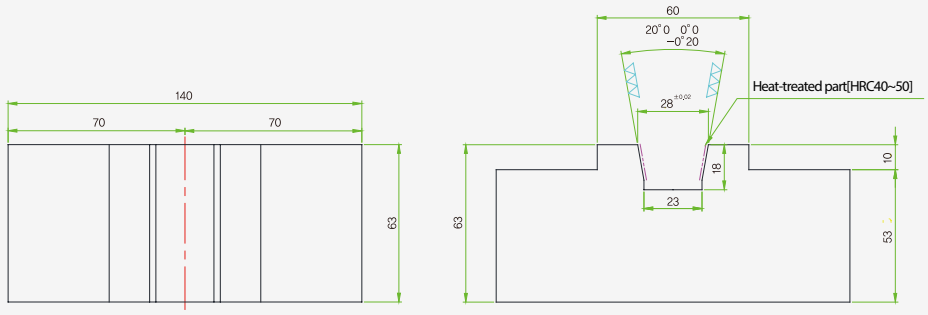

For BT50 — How to determine the block height

Block height H A + B

※ Spindle housing shapes and images may vary according to equipment.

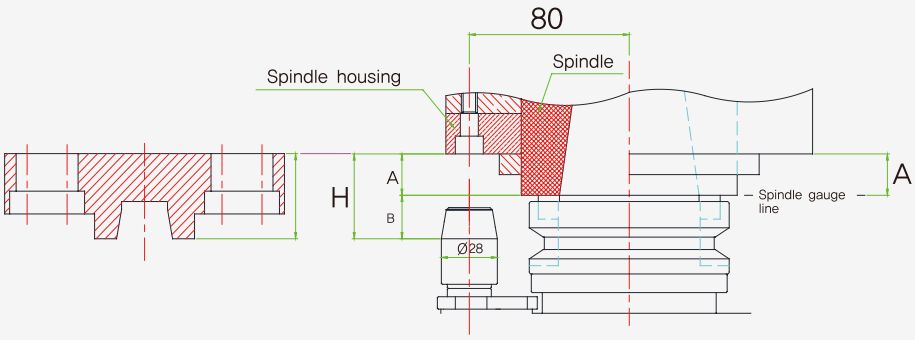

- A : The distance between spindle gauge line to spindle housing cross section for the block bottom
  (To be measured by the customer according to machine specs.)
- B : 21mm [BT50]

H : A + 21mm [BT50]

e.g.) If A is 20.5mm, the block height H = 20.5 + 21 = 41.5mm.

⚠ Note: Be sure to check whether the ATC is interfered before conducting a trial run after installing the positioning block.

Precautions on angular head

- Make sure that all the fixing bolts for the angular head are properly tightened before starting the machine.
- Prior to the use of ATC of the machine,
  - check if conflict and interference occur between the angular head and positioning block and the machine.
  - check that the angular head is safely mounted on the tool magazine.
- Before starting the machine, check the CNC program and the status of the workpiece and also check whether or not conflict with the workpiece occurs.
- Check the rotation direction of the spindle and that of the tool. (Rotation direction check)
- Recommended hours of use : 8 hours/day
  - 30 minute rest after 2-hour operation
  - 1,500~2,000-hour durability
- Do not inject cutting oil direct to the angular head body. (Foreign substance infiltration may cause a trouble.)
- The user's arbitrary disassembly may cause a trouble, for which DINE Inc. assumes no responsibility.

Check the video for explaining product details

Click "Smart Lens"

Scan "QR Code"

Click "Guide Window"

Play the "Product Description" video

Agular head installation

SAH Slim Angular Head